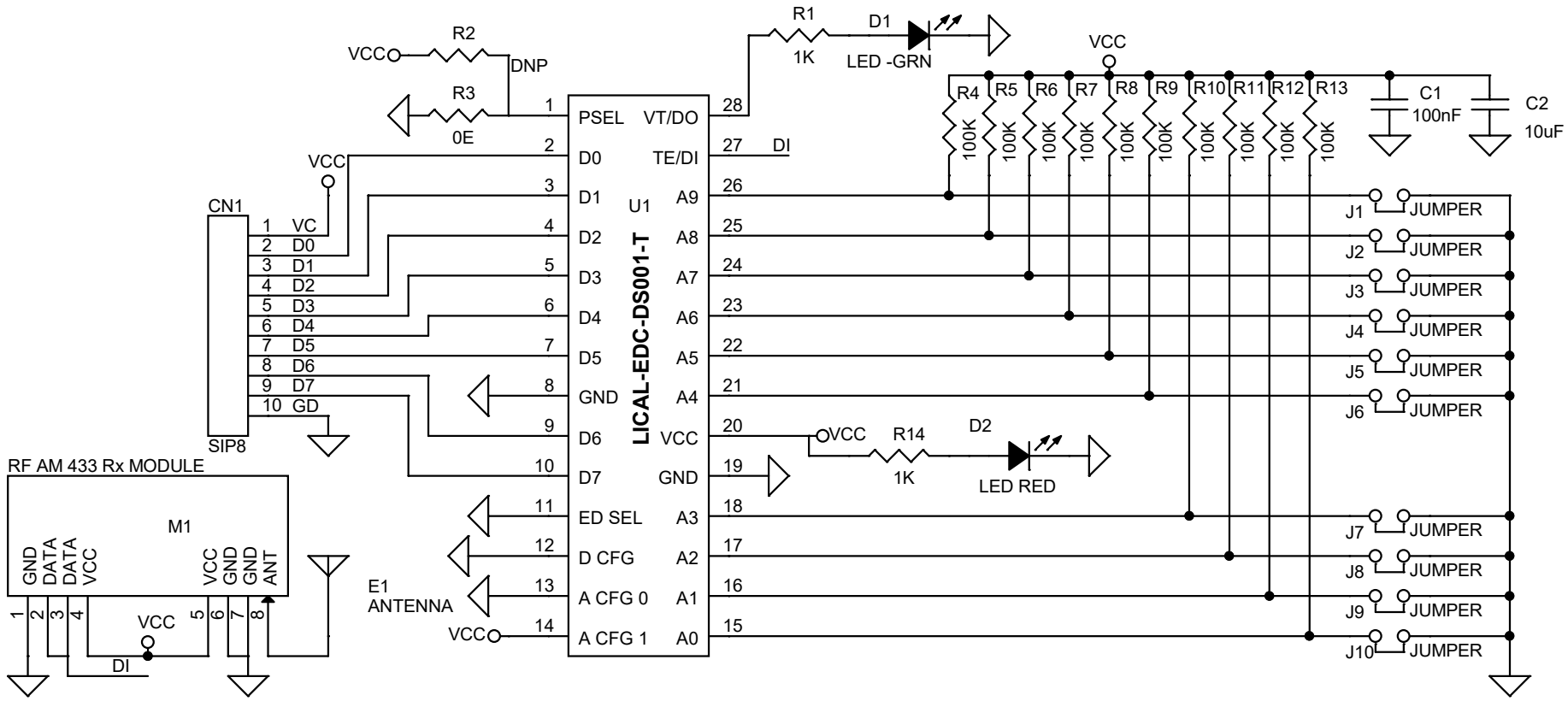

HOLTEK DATA R2=DO NOT POPULATE , R3=0E, SERIAL DATA R2=0E, R3= DO NOT POPULATE